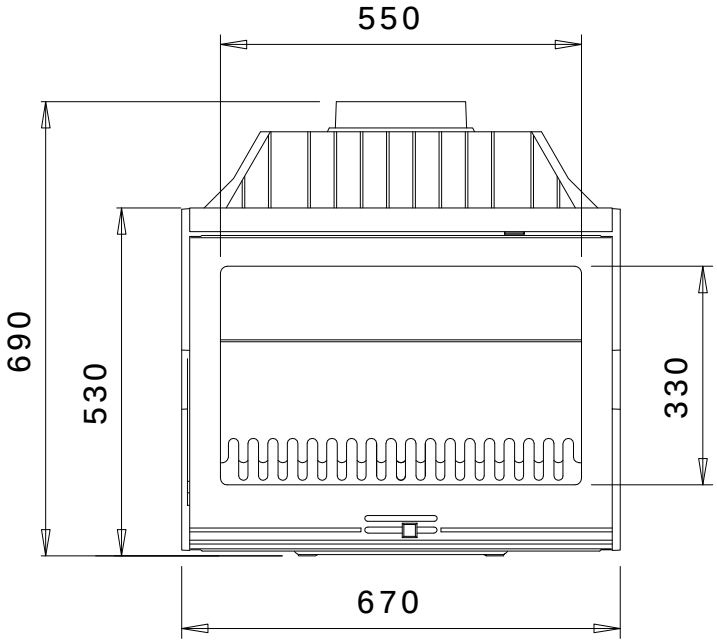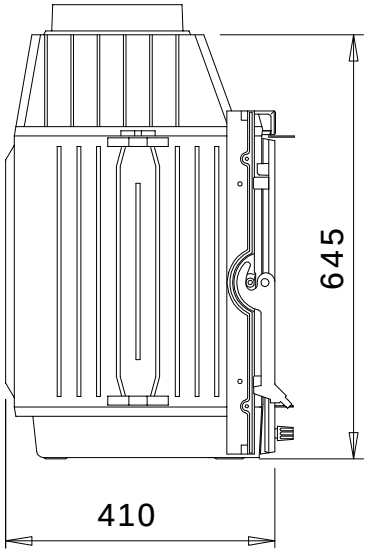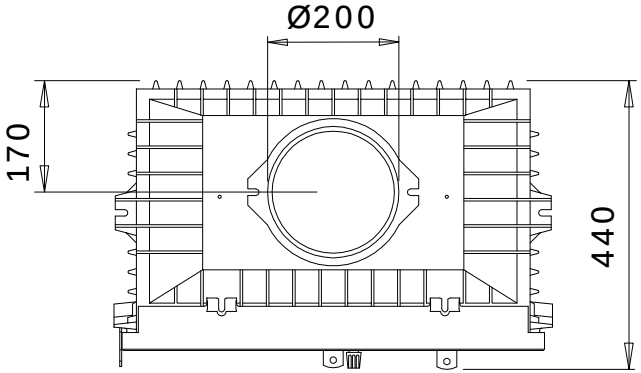2100S