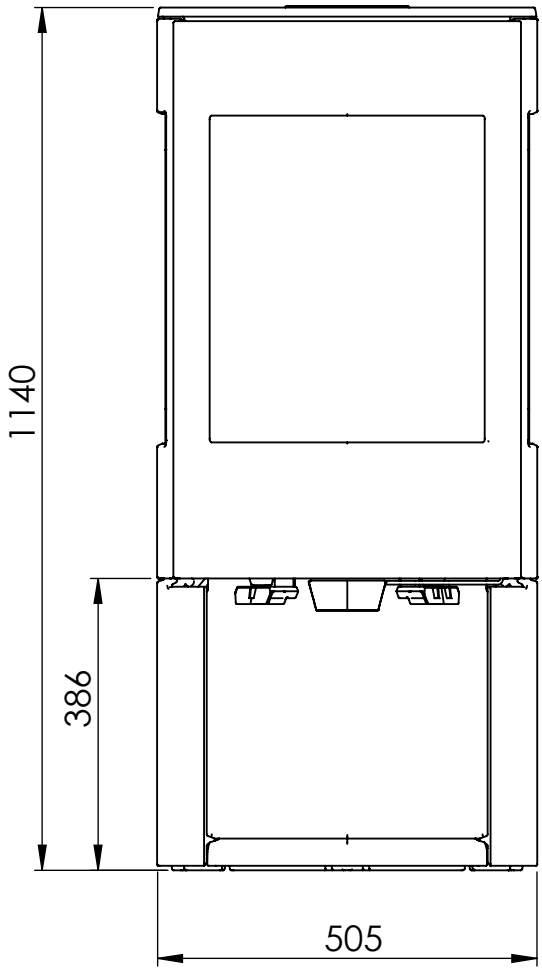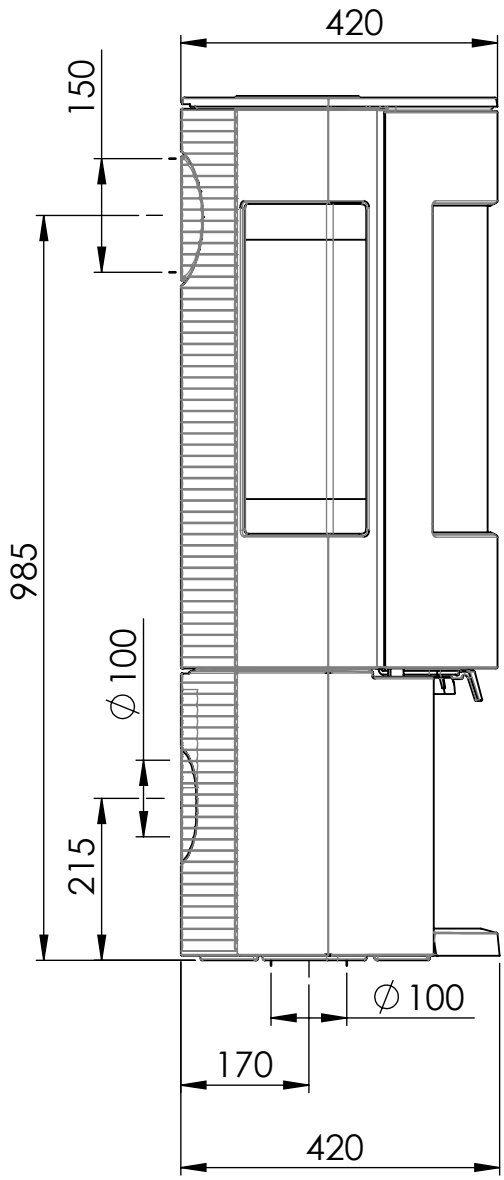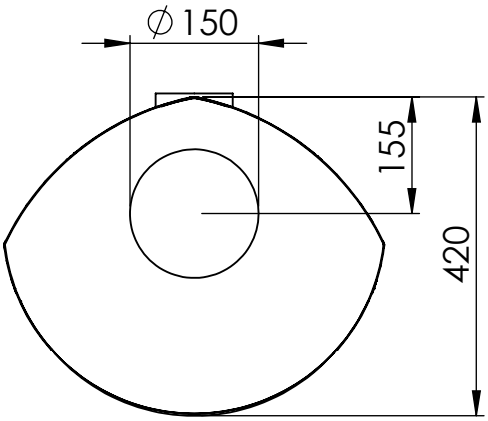ASTRO 3 CB WB/ MF WB